Pneumatic control valve in two way form with PTFE-V-ring sealing, DN15-50 EN-GJS-400-18-LT (GGG-40.3), PN 16/25, with reduced Kvs-values

Body: EN-GJS-400-18-LT (GGG-40.3), two way form
for water and steam
Pressure range: PN 16, PN 25
Immersion length acc. to DIN EN 558, basic series 1
Flanges acc. to DIN EN 1092-2 type 21
Spindle sealing: spring-loaded PTFE-V-ring unit
for media temperatures up to 250°C
Alternatively: graphite-packing
for media temperatures up to 350°C
Internal parts: stainless steel, replaceable seat rings
Flow characteristic: equal percentage
Positioning ratio: 50:1
Leakage: < 0,01% Kvs

Actuator: diaphragm area 250 cm², ø250 mm
Control signal / closing pressure: see table
Operating mode (reversible):
"Spring closes straightway "
Air connection: G1/4"
Operating pressure: standard type: 1,6 bar
other types: ...c: 2,4 bar, ...d: 4,4 bar

Accessories, special types**:**
I/P-Positioner, control signal 4...20 mA (see page 390 8)
P/P-Positioner, control signal 0,2...1,0 bar (see page 390 5)
Electro-pneum. transformer (see page 390 3)
Solenoid valve for operating air (see page 393)
Limit switches (see page 39e)
Inductive limit switches (on request)
Manual operating device (see page 39h)
Other Kvs- values (on request)
Weld-on ends (on request)
Flange drillings acc. to ANSI / JIS (on request)
Bigger DN (see page 3214/5red2)

Order text:
Pneumatic control valve in two way form
EN-GJS-400-18-LT (GGG-40.3), PN . ., DN . ., Kvs . . .
Spindle sealing with PTFE-V-ring unit
Spring closes (opens) straightway
Control signal . . . - . . . bar, closing pressure . . . bar
List-No. 321 . . . , accessories: . . .

Pressure-temperature ratings acc. to DIN EN 1092-2:

by:	-10…120	150	200	250	300	350	°C*
PN 16	16	15,5	14,7	13,9	12,8	11,2	bar
PN 25	25	24,3	23	21,8	20	17,5	bar

** = max. 250°C for spindle sealing with PTFE-V-ring unit*

DN	**List-No.** PN 16	PN 25	**Kvs** m³/h	**Stroke** mm	**Closing pressure** (bar) for control signal... 0,4...1,2bar: standard	1,0...2,0bar: type ...c	2,0...4,0bar: type ...d
15	321 400.	321 500.	4,0	20	17,9	25,0	
15	321 450.	321 550.	2,5	20	17,9	25,0	
15	321 470.	321 570.	1,6	20	17,9	25,0	
20	321 401.	321 501.	6,3	20	17,9	25,0	
20	321 451.	321 551.	4,0	20	17,9	25,0	
20	321 471.	321 571.	2,5	20	17,9	25,0	
25	321 402.	321 502.	10	20	11,1	25,0	
25	321 452.	321 552.	6,3	20	17,9	25,0	
25	321 472.	321 572.	4,0	20	17,9	25,0	
32	321 403.	321 503.	16	20	6,3	22,8	25,0
32	321 453.	321 553.	10	20	11,1	25,0	25,0
32	321 473.	321 573.	6,3	20	17,9	25,0	25,0
40	321 404.	321 504.	25	20	3,6	14,4	25,0
40	321 454.	321 554.	16	20	6,3	22,8	25,0
40	321 474.	321 574.	10	20	11,1	25,0	25,0
50	321 405.	321 505.	40	20	1,9	8,9	20,7
50	321 455.	321 555.	25	20	3,6	14,4	25,0
50	321 475.	321 575.	16	20	6,3	22,8	25,0

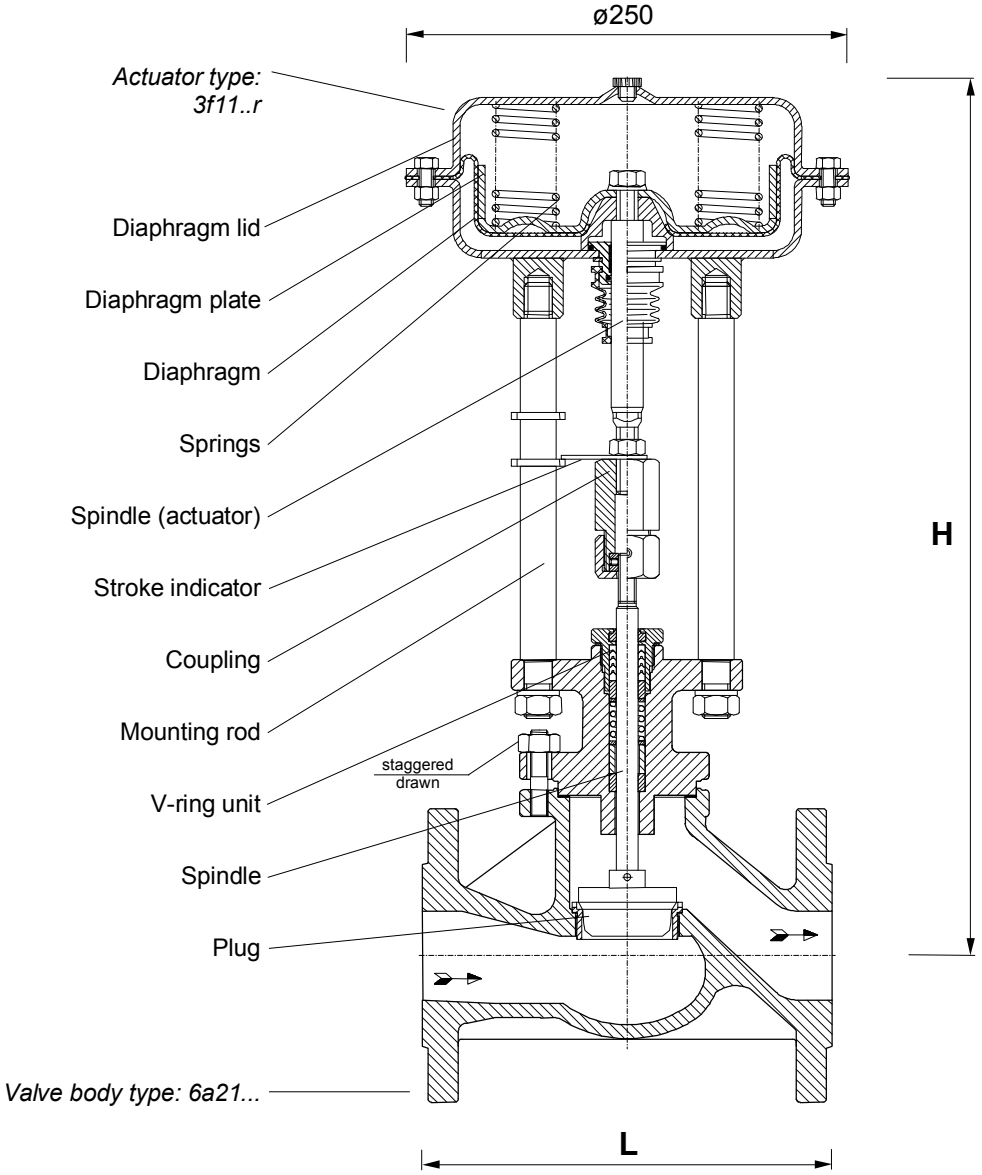

DN	15	20	25	32	40	50
Height H	460	474	468	474	480	482
Length L	130	150	160	180	200	230
Weight kg	16	17	18	20	21	23